TIMING MODULE

FULLY SOLID STATE **ENCAPSULATED**

E75633 LR46938

ONE AMPERE LOAD RATING

Series 607 - PERCENT

CMOS DIGITAL CIRCUITRY

- **Life Expectancy –unlimited**
- **Environment Protected**
- **Tamper Proof**
- **No False Operate**
- **Small Size – 2"x 2" x 53/64"**
- **Lightweight – approximately 2.5 oz.**
- **Rugged**

Output is an adjustable duration of ON time within each consecutive cycle of fixed time. Repeats continuously while energized.

Control the timing of valves, SFHP motors, lamps, relays, magnetic line starters, and actuators rated less than 1 ampere (10 amps inrush). CMOS digital circuitry, with solid state output switching. P/C boards and internal components are encapsulated in a flame retardant molded housing, fitted with quick connect wiring terminals. Available in all standard voltages and frequencies. Fixed cycle timing from 5 seconds to 24 hours.

TIMING DIAGRAM

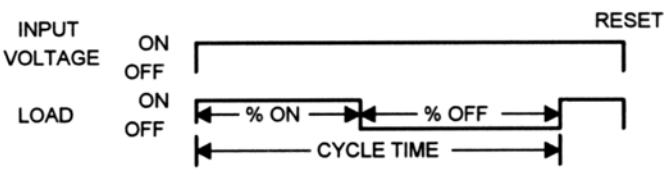

SPECIFICATIONS

1. Repeat Accuracy: ± 0.1% or 16 ms. Whichever is greater
2. Combined Effect of Temperature and Voltage upon Repeat Accuracy: ±1%
3. Reset Time: 150 ms.
4. Operating Voltage Tolerance: ± 20%
5. Load Current: Steady State – 8 ma. Min., 1 Ampere Max.
6 Voltage Drop: 1.5V Typical at 1 Ampere
7. Leakage Current: 5 ma.
8. Dielectric Strength: 1500 VRMS
9. Insulation Resistance: 100 Megohms Min.
10. Input Transient Protection: 3000V 120V UNITS, 6000V 240V units
11. Temperature Ambients: Operating -40°C to +70°C Storage -55°C to +70°C
12. Humidity-Operating: 95% Relative

HOW TO ORDER 607(T) (V) (P)

SERIES	(T) = CYCLE TIME	(V)=VOLTAGE	(P) = OPTIONS
607	P - 5 SEC. 1 - 10 SEC. L - 20 SEC. J - 30 SEC. M - 60 SEC. 2 - 100 SEC. K - 120 SEC. F - 180 SEC. E - 300 SEC. 3 - 1000 SEC. 4 - 10 MIN. G - 30 MIN. H - 60 MIN. 5 - 100 MIN. V - 300 MIN. 6 - 1000 MIN. D - 24 HRS.	1 = 12VDC 2 = 24VDC 3 = 48VDC 4 = 24VAC 5 = 120VAC 6 = 240VAC	O - CUSTOMER SUPPLIES OWN DUAL GANGED POTENTIOMETER E – DUAL GANGED POTENTIOMETER SUPPLIED **MADE IN USA**

EXAMPLE P/N: 607-15E This is a PERCENT 1A Rated Solid State Timer with a 10 second CYCLE TIME and an INPUT VOLTAGE of 120 VAC. The dual ganged potentiometer is supplied.

PRIME TECHNOLOGY

American Control Products / Precision Timer
a division of Prime Technology
344 Twin Lakes Road
North Branford, CT 06471
Telephone: (203) 481-5721
Fax: (203) 481-8937
Email: sales@primetechnology.com
www.primetechnology.com

ACCESSORIES – AVAILABLE FROM STOCK

ORDER P/N: **DPM – 1M , 1 MEGOHM ± 20%**

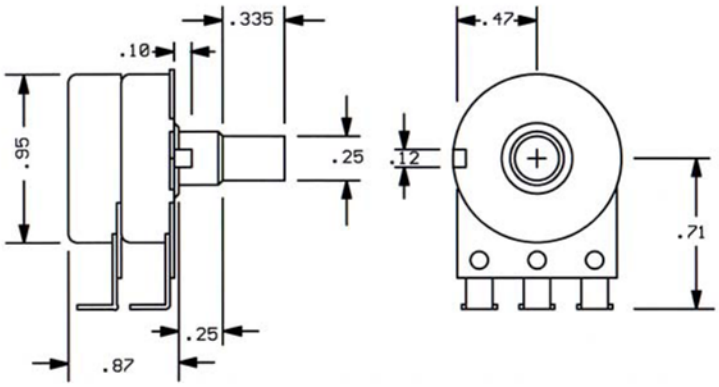

TYPICAL WIRING

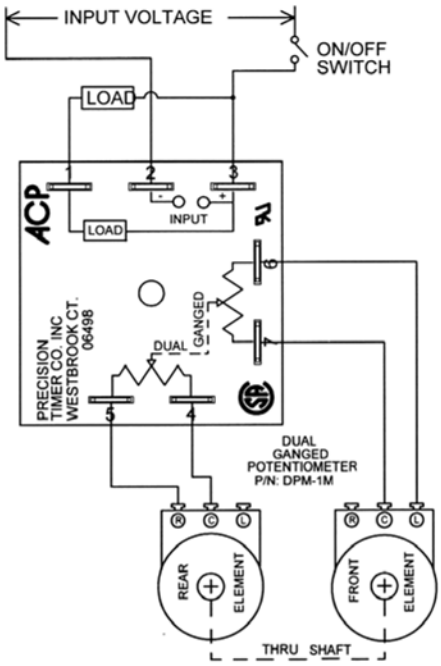

OUTLINE DRAWING

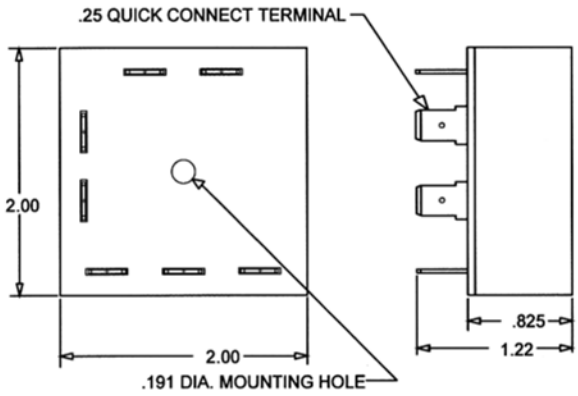

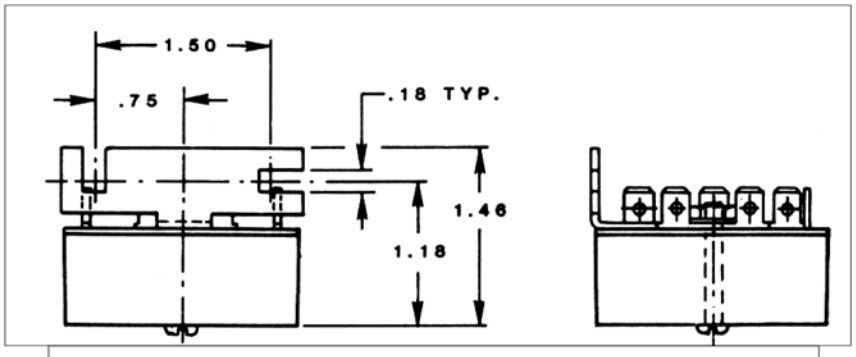

Order bracket mount model as: 607BM – (T) (V) (P)

MADE IN USA

PRIME TECHNOLOGY

American Control Products / Precision Timer
a division of Prime Technology
344 Twin Lakes Road
North Branford, CT 06471
Telephone: (203) 481-5721
Fax: (203) 481-8937
Email: sales@primetechnology.com
www.primetechnology.com